CONSTRUCTION GUIDELINES FOR ON-SITE WASTEWATER SYSTEMS IN ELLIS COUNTY

The attached construction guidelines are a compilation of design and construction standards for on-site wastewater treatment systems in Ellis County. **THESE GUIDELINES DO NOT REPLACE THE ENVIRONMENTAL CODE REQUIREMENTS.** This guide may be used in the planning and construction of the most common type of wastewater treatment system; the septic tank and soil absorption structures. (**Alternative systems will be evaluated on an individual basis)**. The guide is not intended to cover all applicable standards but it should assist in choosing a system that meets your needs. If additional information is required the code administrator will assist as needed.

The following are steps and/or conditions that must be in place before a system can be approved:

1. A site must contain a minimum of two acres, or waivers must be secured for non-compliance sites.
2. A site inspection shall be completed before any permit application is approved.
3. A permit application must be submitted before construction is initiated.
4. The system shall be inspected **Before** any portion is covered.
5. An accurate drawing of the system structure and location shall be submitted following the completion of the system.

CHARACTERISTICS AND FUNCTIONS OF CONVENTIONAL SYSTEMS

SEPTIC TANKS- All domestic wastewater generated on-site must be discharged into a septic tank or an approved alternative (K.A.R. 28-5-7). All septic tanks must meet minimum State construction standards.

Household wastewater will clog all but the most porous gravel formations if applied without proper treatment. A septic tank provides treatment in a watertight chamber, and conditions the wastewater to be absorbed into the soil. The septic tank separates the settleable and floatable solids, contains bacteria necessary to break down the solids, and provides storage for the retained "sludge" and "scum". A vertical section of a properly operating tank would show it divided into three distinct layers; "scum" at the top, a middle zone free of large solids called "clear space", and a bottom layer containing waste residue or "sludge". (**FIGURE 1)** Septic tanks are constructed with baffles or sanitary tees to reduce the velocity of the water containing settling solids, minimize the disturbance of the settled sludge, and restrict floating scum from being discharged when the wastewater leaves the tank. Effluent filters shall be installed to further restrict the discharge of solids. (**Figure 1A).** Septic tank design shall include openings large enough (Min.20") for cleaning and repairing the tank. They shall be located to permit access at the tank inlet and outlet devices. Septic tank details are shown in **FIGURE 1.**

All septic tanks shall be installed according to manufacturers specifications.

SEPTIC TANK -Figure 1

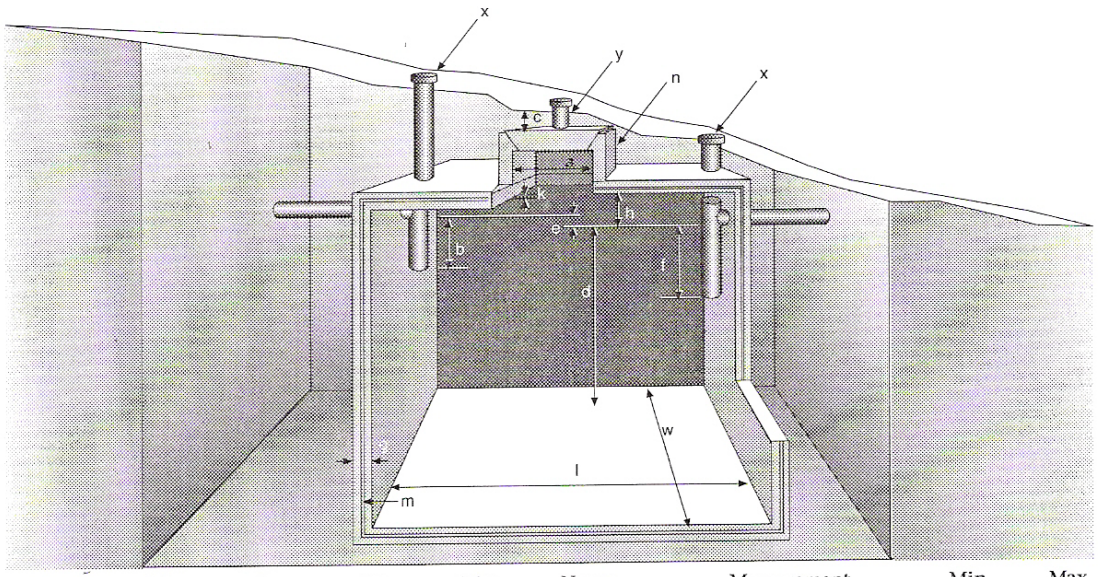

Name	Measurement	Min.	Max.
a. access manhole	smallest dimension	20"	—
b. inlet baffle	penetration	8"	0.2 × d
c. cover[20]	surface to manhole	surface	12"
d. liquid depth	outlet to tank bottom	3'	6½'
e. difference	inlet to outlet inverts	3"	4"
f. outlet baffle	outlet to bottom	0.35 × d.	
g. thickness	wall	2½"	—

Name	Measurement	Min.	Max
h. open space	outlet invert to top	7"	0.15 × d
k. space	gap	1"	—
l. tank length	inside of walls	6'	4 × w
m. reinforcement	per engineering design		as needed
n. extension riser length[20]	to ≤ 1' from surface grade		
w. tankwidth	inside of walls	4'	
x. inspection riser	inside diameter	6"	
y. location riser	inside diameter	1½"	

[19]Where locally available products cannot presently meet these requirements, manufacturers will have until July 1, 2002 to comply.
[20]If tank is deeper than 12" add extension riser as shown so top of riser is no more than 12" from surface

Figure 1A- Effluent Filters

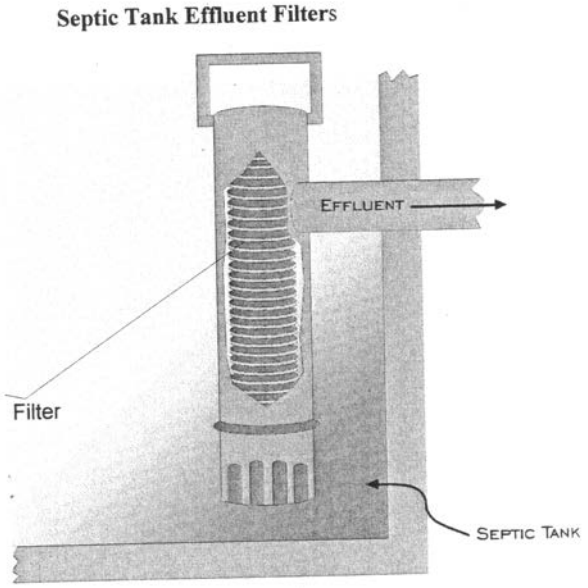

Septic tanks shall have an access manhole with 20 inches minimum dimension for each compartment. If the manhole does not extend to surface grade, a small diameter (at least 1 ½ inch diameter) pipe shall extend to surface from the cover to mark the location of the manhole. This pipe shall not penetrate the lid of the tank. Inspection risers at least 6 inch diameter shall extend to surface grade centered over the inlet and outlet tees. All below grade attachments to the tank, connections, riser, extensions and lid shall be water tight. When any opening larger than 8 inches extends to the surface, that opening shall be child and tamper resistant. Ways to accomplish this include lids weighing at least 65 pounds, locks, or anchors that are not removable without special tools.

Flow Detention

Septic tanks are designed to handle the daily flow of the serviced facility, and should have sufficient capacity for a minimum detention of two or three times the daily wastewater flow. **All designs shall be based upon the maximum capacity of the facility rather than its number of inhabitants at any particular time.** The design should allow for the inclusion of laundry and garbage grinder wastes.

Only domestic waste will be allowed to be discharged into the septic system. Domestic waste is: Individual wastewater streams generated by water-using activities from a variety of plumbing fixtures and appliances.

KANSAS REGULATIONS REQUIRE ALL DOMESTIC WASTEWATER TO BE TREATED AND DISPOSED OF THROUGH AN ON-SITE SYSTEM OR A PUBLIC TREATMENT FACILITY.

Capacity

Minimum capacities for septic tanks being used for the treatment of residential wastewater are shown in **Table 1**. Tanks larger than the minimum have the advantage of better solids separation, increased retention time, and offer more sludge storage. Larger tanks require less frequent cleaning and allow for future expansion. **Increased tank size has a good cost-benefit return.** Septic tanks not used for residential wastewater treatment shall be sized by the code administrator, and the size shall be based on flow rates.

TABLE 1. Minimum septic tank capacities.

Number of Bedrooms	Septic Tank Capacity (gallons)[1] Minimum
3 or less	1,000
4	1,250
5	1,500[2]

1 Volume held by the tank below the liquid level (outlet pipe invert).
2 For each additional bedroom add 250 gallons to the minimum size.

Septage Disposal

Septage is considered a public health hazard because of the many disease-causing organisms it may contain. Only companies or individuals approved by the county may engage in the pumping or cleaning of septic tanks or the transport of sewage. The county code addresses certification of septic tank pumpers and the proper dispose of the septage. Approved septage haulers know how to manage septic tank waste. The homeowner shall be informed about his/her responsibility to make sure that septic tank pumpage, or septage, is properly handled. He/she may be held liable for the improper disposal of household wastewater.

Septic Tank Abandonment

When a septic tank is discontinued from use, the tank must be removed or filled. The tank should be pumped completely to remove all solids and liquid. The best approach is to remove the tank at this point to avoid any potential future problems with later construction. If the tank will not be removed, it should be collapsed and the hole filled in. If not collapsed, the tank may be perforated with several holes drilled in the bottom of the tank. The tank should then be filled with stable fill material such as gravel, sand or other inert non-settling material. This avoids the danger of the tank collapsing later.

Sewer Lines

All sewer line from the house to the tank, all fittings and pipe in the tank, all extensions to the surface from the top of the tank and the first 10 feet exiting the tank shall be schedule 40 or heavier.

SOIL ABSORPTION SYSTEMS

Treatment

Septic tank effluent still contains suspended solids, contaminates, and may contain harmful organisms. At this point in the treatment process effluent is not suitable for discharge to the environment. Additional treatment of the septic tank effluent occurs in the soil absorption system and soil by providing additional filtration and oxidation of suspended solids. If the absorption system is kept shallow, the root system of the vegetative cover can penetrate the surrounding soil and take up water, phosphates and nitrogen. This will minimize the potential for phosphate or nitrate contamination of the groundwater. The vegetative cover will also reduce the water load by transpiration.

There are several types of absorption systems that might be used but this guide will limit the discussion to the trench type systems.

Location

Wastewater systems **shall never** have driveways, walkways, or buildings, constructed over any portion of any on-site wastewater treatment system. Areas of seasonal flooding and slopes of greater than 25 per cent (25 feet per 100 feet) shall not be used. **The bottom of the absorption area shall be a minimum of four feet above the seasonal high water table and/or any consolidated formation.** Surface water shall be diverted from the absorption area. The absorption area should be located in areas where good vegetative cover is possible. **MINIMUM DISTANCES FROM WATER SOURCES, STRUCTURES AND PROPERTY LINES SHALL BE OBSERVED. See Table 2.**

TABLE 2. Minimum Separation Distances for Onsite Wastewater Systems

Separation of wastewater system to:	Horizontal Distance in Feet	
SEPTIC TANK to:	Required	Recommended
foundation of house or other buildings	10	10
SOIL ABSORPTION SYSTEM to:		
dwelling foundation	20	50
Any part of a wastewater system to:		
Public potable water line	25	25
Private potable water line	10	25
property line	10	50
public water supply well or suction line	100	200
private water supply well or suction line	50	100
surface water course	50	100

Trench Systems

Absorption trenches should be of sufficient width and length to provide the required absorption area. See **Figures 3, 4, & 5 for** trench cross sections.

1. The bottom of the trench should be **level** throughout its length.
2. Absorption trenches **shall not exceed 100 feet** from the point of discharge. Ideal length is 60'.
3. Trenches may be 24 to 36 inches wide.
4. Trenches shall be **no** deeper than 36 inches.
5. Systems requiring more than one distribution line shall **utilize distribution boxes with speed levelers or the equivalent.**
6. The sides and bottom of all trenches shall be raked if the soils have been smeared during the excavation process.
7. There shall be a minimum separation of four (4) feet between the bottom of a trench and any consolidated formation and/or the water table.
8. **Inspection ports shall be installed** within the first half of each lateral run.

ABSORPTION FIELD SEPARATION DISTANCE

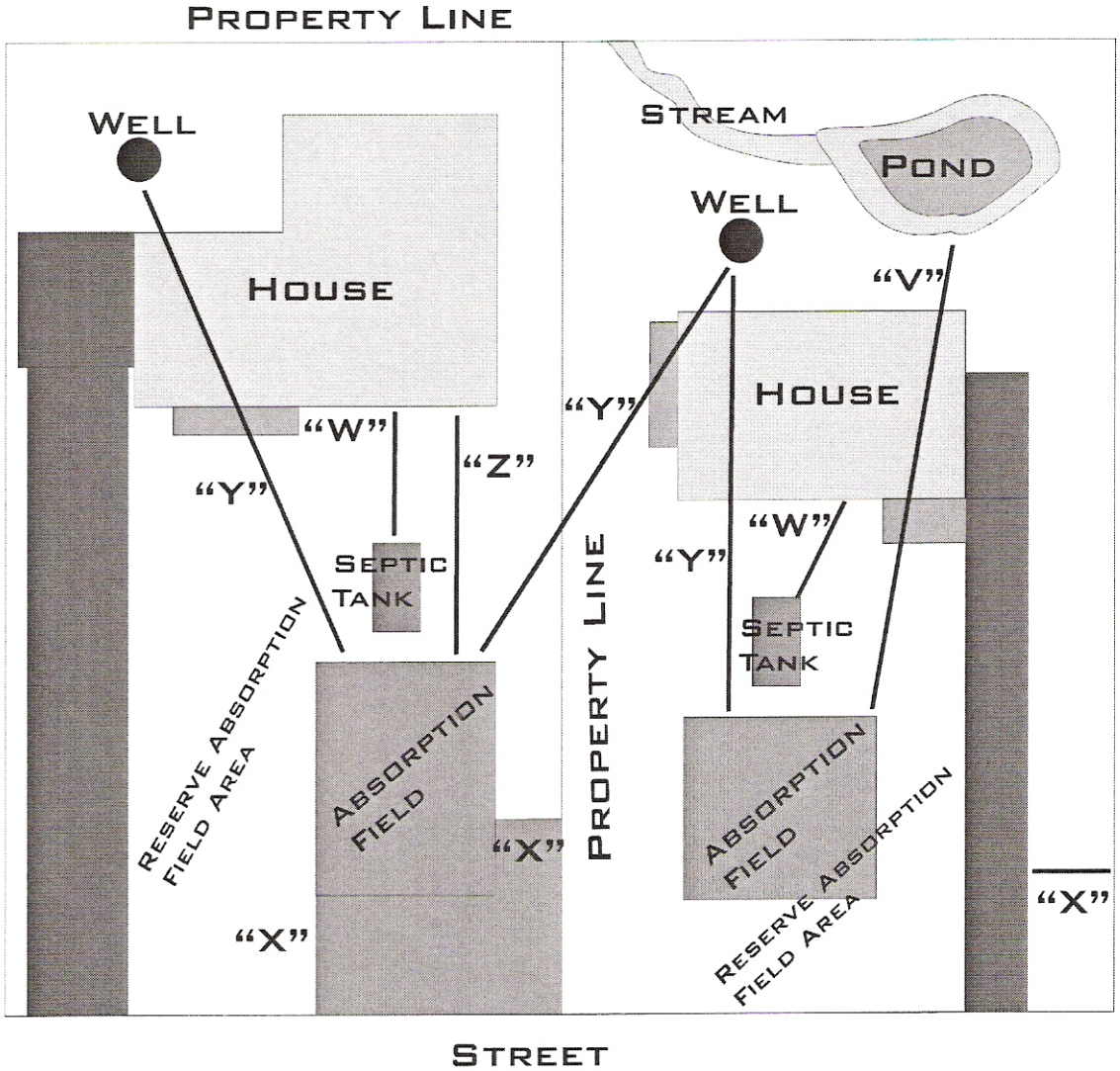

"V" - 50' minimum
"W" - 10' minimum
"X" - 50' minimum
"Y" - Public Well =100' minimum
- Private Well = 50' minimum
"Z" - 20' minimum

In order to meet these separation distances, a lot size of 2 acres is needed.

PERFORATED CONDUIT SYSTEMS
(FIGURE 3)

1 Four (4) inch perforated distribution pipe shall be placed the entire length of the trench with the holes placed at 4 and 8 o'clock positions on the pipe circumference. It shall be surrounded by **clean**, graded gravel, rock or material of equal efficiency. All material shall be approved by the code administrator before it is placed.
2. The rock may range in size from 3/4 inch to 2 1/2 inches in diameter.
3. The rock should be placed at least 6 inches below the pipe and at least 2 inches above the pipe making a minimum of 12 inches. If there is a possibility of tree root invasion, additional material should be placed below the pipe to reduce the invasion potential.
4. There shall be at least six (6) feet of undisturbed soil between trenches.
5. The perforated pipe for gravity distribution shall be rigid enough to remain level throughout the trench.
6. The pipe shall be installed level.
7. The terminal ends of the lines shall be capped unless looped or air vented.

Figure 3-

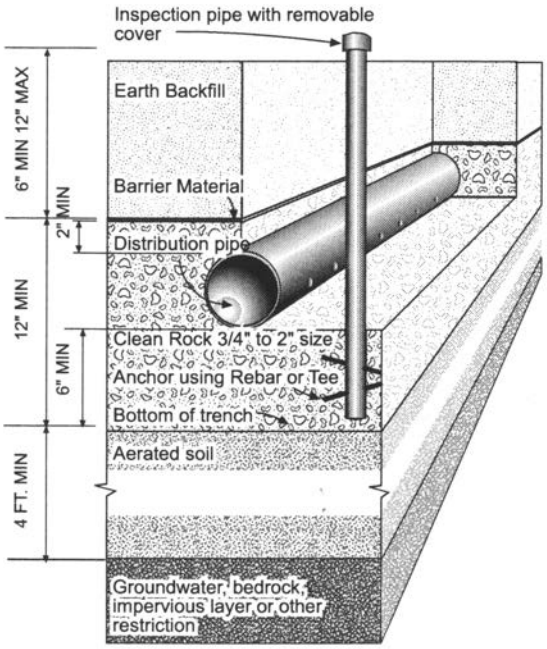

CHAMBER SYSTEMS
(FIGURE 4)

1. Chambers trenches shall be separated by six (6) feet of undisturbed soil.
2. Fill the sidewall area to the top of the louvers by pulling soil from trench sides with a shovel. Be sure the fill covers the louvers. Pack down the fill by walking along the edges of the trench. This is an important step that assures correct structural support.
3. All installations must comply with manufacture specifications.
4. Risers shall be installed at the beginning of each lateral run.

Figure 4- Chamber System

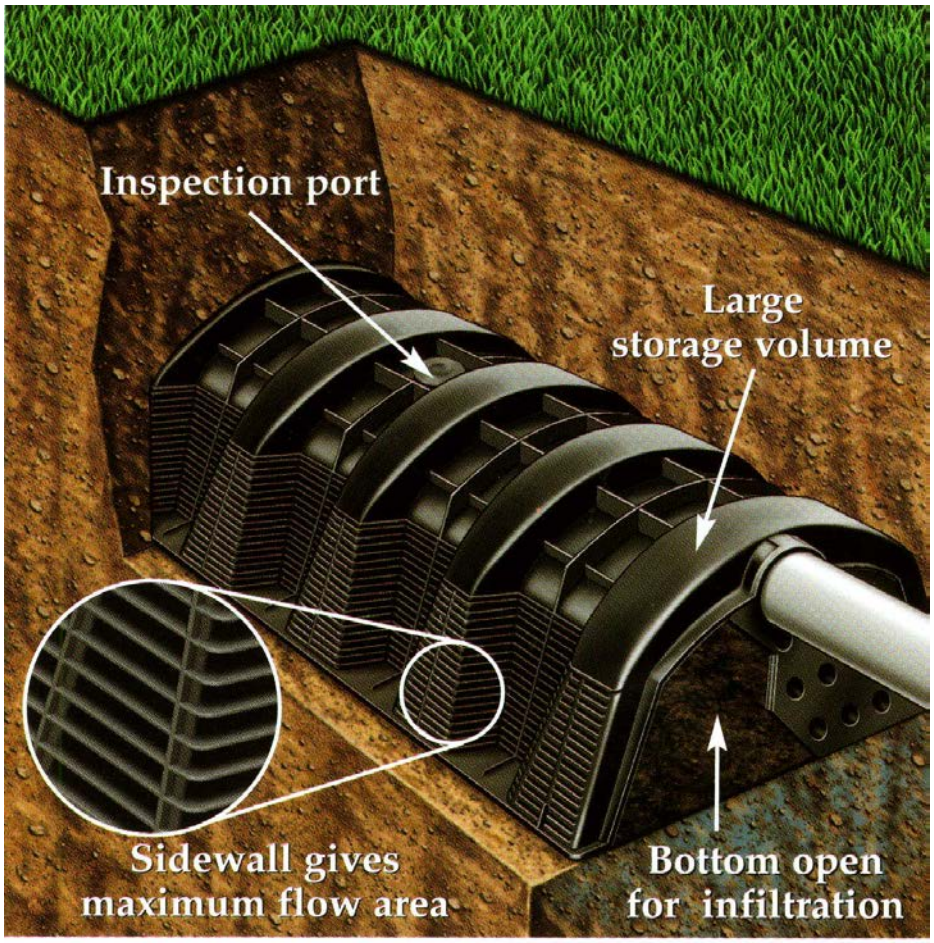

GRAVEL-LESS LEACHBED PIPE
FIGURE 5

1. Minimum separation distances for trenches shall be six (6) feet of undisturbed soil.
2. Maximum trench depth shall be 24" or as per manufactures recommendations.
3. All installations shall be as required by manufactures specifications.

Figure 5- Gravel-less leachbed pipe

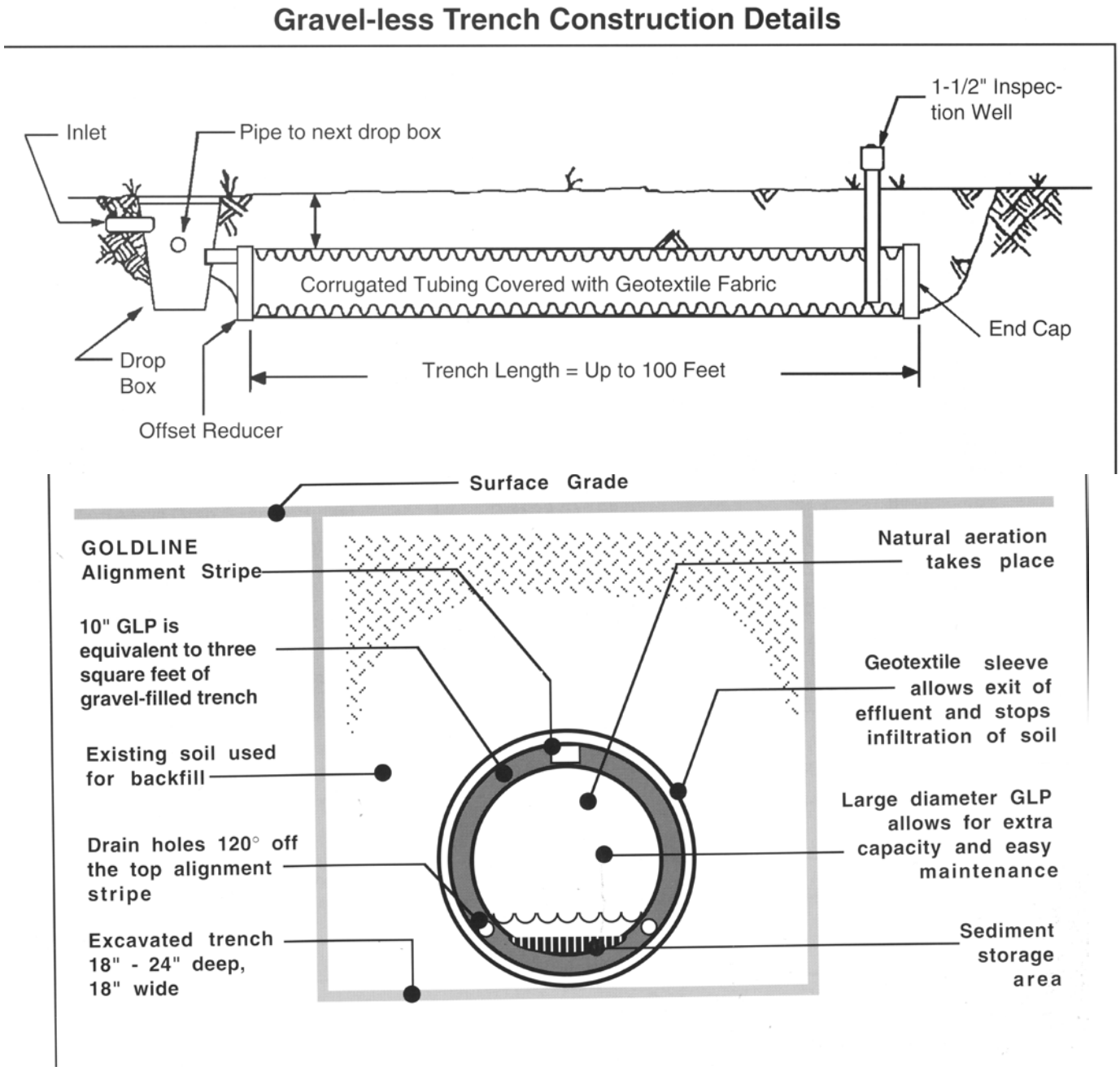

Field Layout

Two types of absorption field layouts are in common use:

1. Parallel--level absorption laterals for areas where slope is less than 2 percent; and
2. Step Down absorption systems--using drop boxes or overflow distribution for slopes exceeding 2 percent. See **Figure 6** for examples of these layouts.

Field Layout- Figure 6

PARALLEL

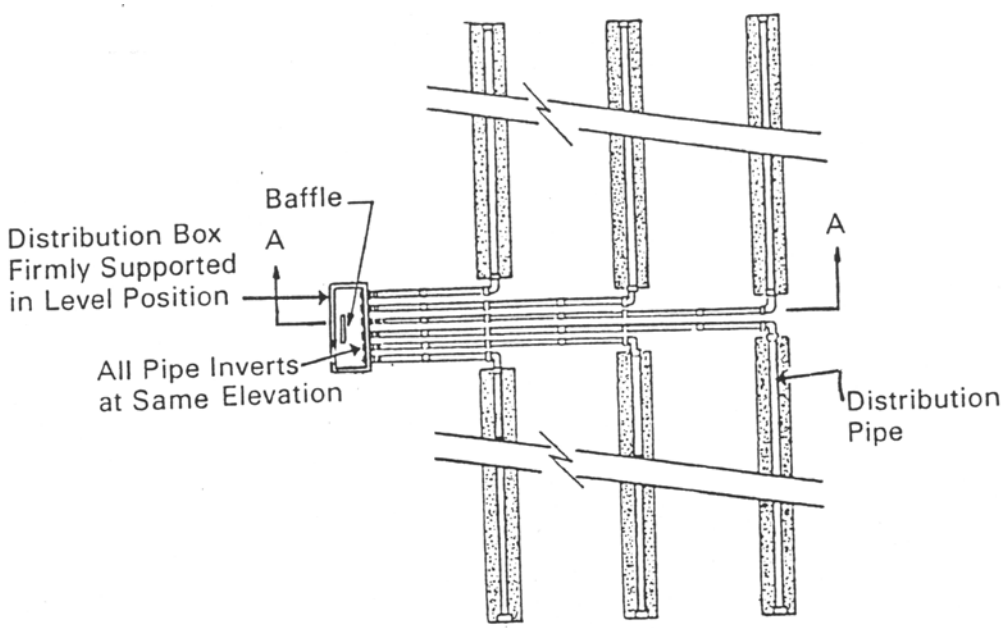

STEP DOWN

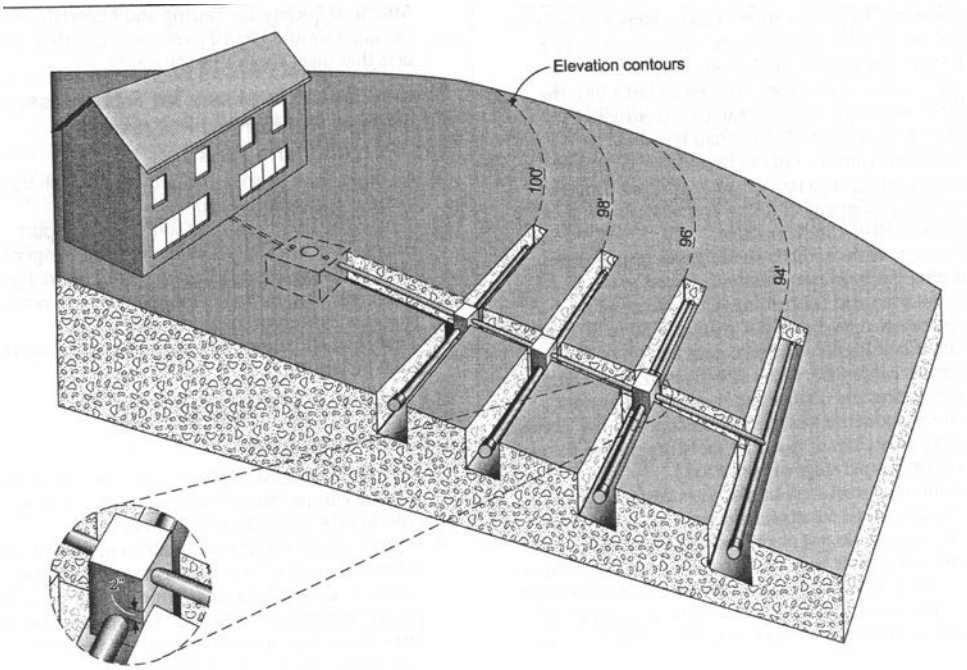

Public Sewers

An important consideration for wastewater treatment location is the possibility of future connection to public sewers. The home's plumbing should be designed to facilitate this connection in the future. Whenever public sewer service becomes available (within 400 feet), the home shall be connected to the public system.

There may be conditions when compliance will not be reasonable, and compliance would not be required. Those conditions will be evaluated on an individual basis.

Reserve Area

When planning and locating the absorption system reserving a suitable area for the construction of a second system should be given consideration. The second system would be added if the first were to fail or if the system required expansion due to increased wastewater flows. Care must be used in constructing the second system so that the original system is not damaged by the construction equipment.

SOIL REQUIREMENTS

Suitability of Soils

The most important perimeter in the construction of a wastewater treatment system is the capacity of the site's soil. The soil's capacity to absorb wastewater is the determining factor for all system designs. The first step in the design of a subsurface wastewater system is to determine soil suitability. What is its absorption capacity?

The soil must have an acceptable percolation rate to function satisfactorily.
The following conditions shall be met:

1. The soil percolation rate shall be between 5 and 60 minutes per inch. If the rate is slower than 60 min. per inch alternative systems shall be considered. If the soil is a sandy structure and the percolation rate is greater than 5 min. per inch, the percolation rate shall be reduced by soil modification.
2. There shall be at least 4 feet of suitable soil between the bottom of the absorption field and consolidated formation or the maximum seasonal groundwater table.
3. There shall be a ground slope of no more than 25 percent.

Soil Profile

A soil profile is required to a depth of a least seven feet, when the soil type has limiting conditions. A soil profile may be obtained by using the backhoe during the excavation of the system. A coring tool may also be used to determine the types of soil for the profile.

Soil Type

Soil type at the site should be identified by physical examination and by referencing the Soil Conservation Service soil survey maps. Any limiting condition for that soil should be noted. Soil limitations in Ellis County are compiled in **Table 3**.

TABLE 3

Ellis County Soil Types, Limiting Conditions & Percolation Rates

Soil Type	**Symbol**	**Limitations**	**Perc. Rate**
Sands			
Invale	In.....	Occ. Flooding	5 min/in
SANDY LOAMS			
Anselmo	Ac.....		25 min/in
Boel	Bf.....	Water Table 2-6 ft, Freq. Flooding	
McCook	Mc..Md.....	Flooding in Some Areas	
Munjor	Mu.....…	Water Table, Freq. Flooding	
LOAMS			
Armo	Am,An,Ao,Ar.....		35 min/in
Wann	Wn.....	Water Table 2-6 ft, Freq. Flooding	
SILT LOAMS			
Detroit	De.....	Slow Perm, Occasional Flooding	40min/in
Eltree	Ee,Ef,Eg,Eh.....		
Harney	Ha,Hb,Hc,Hd,He,Hf,Hg,Hh,Hk.....	Moderately Slow Perm	
Holdredge	Ho,Hp.....		
Hord	Hr.....	Occasional Flooding in Some Areas	40min/in
McCook	Mc..Md.....	Flooding in Some Areas	
Roxbury	Rb,Rf.....	Occasional to Freq. Flooding	
CLAY LOAMS			
Crete	Cr,Ct.....	Slow Perm	45 min/in
CLAYS			
New Cambria	Nc.....	Slow Perm **PERC. TESTS/ PROFILE REQUIRED**	
SOILS TOO VARIABLE TO CHARACTERIZE			
Alluvial Land	Ab,Ac,Ad.....	**PERC. TESTS/ PROFILE REQUIRED**	
Hilly Land	Hn.....		
Rough Broken Land	Ro.....		

SHALLOW SOILS **PERC. TESTS/ PROFILE REQUIRED**

Bogue Clay Bg.....Very Slow Perm,Shale at 20-40 in
Bogue-Armo Complex Bo..... " "
Brownell Gravelly loam Br..... Limestone at 20-40 in
Campus-Carlson Complex Cc..... Caliche at 20-40 in
Campus-Penden Complex Cd..... "
Canlon Complex Ce..... Caliche at 10-20 in
Corinth Silty Clay Loam Cm,Cn,Co..Shale at 20-40 in
Heizer-Armo Complex Hi..... Limestone at 10-20 in
Mento Silt Loam Me,Mf..... Limestone at 40-70 in
Mento Silty Clay Loam Mg...Mo..... "
Nibson Silt Loam Nn..... Limestone at 10-20 in
Wakeen Silt Loam Wa,We,Wh,Wk.... Limestone at 20-40 in

PERCOLATION TEST AND SIZING THE ABSORPTION FIELD

The total area of absorption trenches is dependent on two factors: wastewater flow and maximum soil loading rate. A site evaluation characterizes the soil and its appropriate loading rate. Wastewater design flow for residential use is based on the number of bedrooms at 150 gallons per day per bedroom. The absorption area is obtained by multiplying the number of bedrooms times the soil absorption rate. Soil percolation (absorption) rates may be determined by a percolation test or by identification of the soil type from Soil Conservation Service maps, and determining the percolation rate from the general soil class (see **Table 3**).

Conducting a Perc Test

1. Number and Location of Tests: A **minimum of three** percolation test sites (holes) shall be located in the area proposed for the absorption system. They shall be spaced uniformly in the area to be used. If soil conditions are highly variable, more tests shall be required.

2. Preparation of Test Hole: Test holes should be the same size. They may be bored or otherwise constructed to the depth of the absorption area. To expose a natural soil surface and break any smeared surface, the sides of the hole shall be scratched with a sharp instrument. All loose material shall be removed from the bottom of the test hole. Two inches of 1/2 to 3/4 in. gravel are placed in the hole to protect the bottom from scouring when adding water.

3. Soaking Period: The hole is filled with at least 12 inches of clear water. When working with clay soils the water should be maintained overnight. Avoid washing down the sides of the hole if possible. Automatic siphon devices or float valves are

helpful when trying to maintain the water level during the soaking period. **It is important to allow soaking if accurate results are to be obtained.**

In sandy soils, soaking is not necessary. After filling the hole twice with 12 inches of water, and the water seeps away in less than ten minutes, the test can proceed.

CONTACT THIS OFFICE BEFORE PROCEEDING

4. Measurement of the Percolation Rate: Any soil that fell into the hole during the soaking period should be removed and the water level adjusted to 6 inches above the gravel (or 8 inches above the bottom of the hole).

After adjustment, the water level is measured from a fixed reference point (See Figure 7). After adjusting the water level at least three measurements are made at 30 minute intervals. (Shorter intervals may be used in very sandy soils.)

Figure 7- measuring details

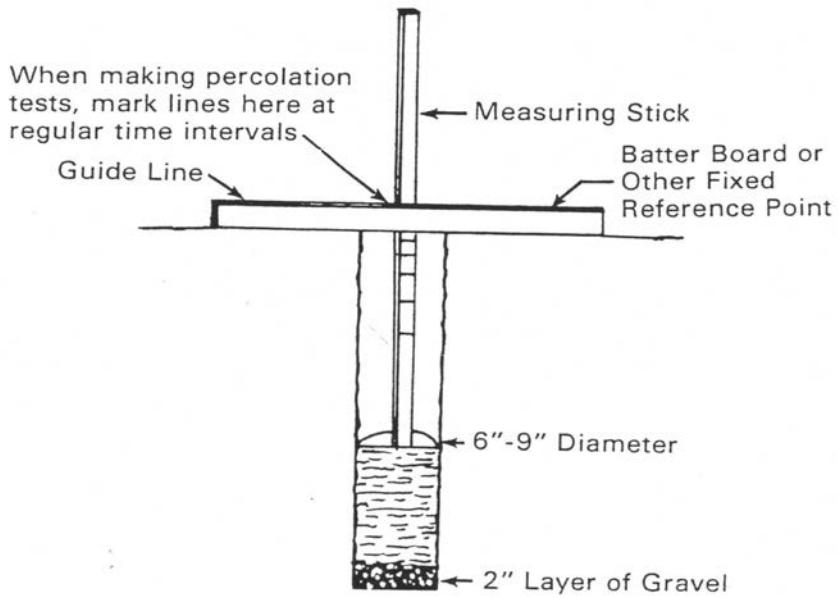

5. Calculation of the PERCOLATION Rate:
The PERCOLATION rate is calculated by dividing the time intervals by the drop in the water level. This calculation results in a percolation rate in terms of minutes per inch. The average drop of all holes are calculated and used in determining the rate.

Sample:

Hole #	Start Time	Start Measure-ment	1st Test Time	Measure-ment	1st drop	2nd test time	Measure-ment	2nd drop	3rd test time	Measure-ment	3rd drop	4th test time	Measure-ment	4th drop	Average perc rate for hole
1	8:00	18½	8:30	16½	2	9:00	15½	1	9:30	14½	1	10:00	14	½	2 + 1 + 1 + .5 = 4.5
2	8:00	18	↓	17¼	¾	↓	16½	½	↓	15½	1	↓	14½	1	.75 + .5 + 1 + 1 = 3.25
3	8:00	17¾	↓	16¾	1	↓	16	¾	↓	15½	½	↓	15¼	¼	1 + .75 + .5 + .25 = 2.5
4	8:00	18	↓	15¾	2¼	↓	14	1¾	↓	12½	1½	↓	11¼	1¼	2.25 + 1.75 + 1.5 + 1.25 = 6.75
5															
6															
Total Drop															17.0
Average Drop												17.0 divided by 4 (Number of Holes)			4.25
Average perc Rate												120 min. (total time) ÷ 4.25 (Average Drop)			28.23 MPI

Conversion Chart

1/4 equals 0.25	1/2 equals 0.5	3/4 equals 0.75	1 equals 1.0

CALCULATING ABSORPTION FIELD SIZE

The absorption area referred to in these calculations is always the trench bottom. Trench sides play an important role in absorbing wastewater, but trench bottom area is the measure used to compare absorption field sizes. In order to simplify the calculations **Table 4** provides area in square feet per bedroom for the various PERCOLATION rates. **To size your system, determine the percolation rate, find the required area per bedroom and multiple by the number of bedrooms. <u>In all cases, size for a minimum of three bedrooms, when doing a residential system.</u>** Business, industrial, or commercial systems may vary.

<u>Absorption Beds</u>

Absorption beds are modified trenches. The trench structures are side by side with no separation between the trenches. This wide excavation is constructed to the width required by the absorption area needed. The bed is sized 50% greater than conventional trenches because of the loss of sidewall absorption of multiple trenches. Absorption beds are only used when lot size prohibits the use of conventional trenches, and approved by the code administrator.

Table 4 - Perc Rate

Perc Rate Min. Per Inch	3 bedroom Running Feet	# of 4'Chambers	4 bedroom Running Feet	# of 4'Chambers	5 bedroom Running Feet	# of 4'Chambers
5	125	32	167	42	209	53
6	133	34	178	45	222	56
7	141	36	188	47	235	59
8	149	38	199	50	249	63
9	157	40	210	53	262	66
10	165	42	220	55	275	69
11	170	43	227	57	284	71
12	175	44	234	59	292	73
13	180	45	240	60	300	75
14	185	47	247	62	309	78
15	190	48	254	64	317	80
16	194	49	259	65	324	81
17	198	50	264	66	330	83
18	202	51	270	68	337	85
19	206	52	275	69	344	86
20	210	53	280	70	350	88
21	214	54	286	72	357	90
22	218	55	291	73	364	91
23	222	56	296	74	370	93
24	226	57	302	76	377	95
25	230	58	307	77	384	96
26	234	59	312	78	390	98
27	238	60	318	80	397	100
28	242	61	323	81	404	101
29	246	62	328	82	410	103
30	250	63	334	84	417	105
31	254	64	339	85	424	106
32	258	65	344	86	430	108
33	262	66	350	88	437	110
34	266	67	355	89	444	111
35	270	68	360	90	450	113
36	273	69	364	91	455	114
37	276	69	368	92	460	115
38	279	70	372	93	465	117
39	282	71	376	94	470	118
40	285	72	380	95	475	119
41	288	72	384	96	480	120
42	291	73	388	97	485	122
43	294	74	392	98	490	123
44	297	75	396	99	495	124
45	300	75	400	100	500	125
46	302	76	403	101	504	126
47	304	76	406	102	507	127
48	306	77	408	102	510	128
49	308	77	411	103	514	129
50	310	78	414	104	517	130
51	312	78	416	104	520	130
52	314	79	419	105	524	131
53	316	79	422	106	527	132
54	318	80	424	106	530	133
55	320	80	427	107	534	134
56	322	81	430	108	537	135
57	324	81	432	108	540	135
58	326	82	435	109	544	136
59	328	82	438	110	547	137
60	330	83	440	110	550	138

CONSTRUCTION CONSIDERATIONS

Compaction

Soil conditions and construction practices are equally important in determining the efficiency and longevity of absorption systems. When the soil is too wet construction activity causes compaction and smearing of the soil structure, greatly reducing infiltration rates. Construction methods that involve excessive equipment or foot traffic can compact or smear relatively dry soils. After final grading, trench bottoms and sidewalls should be raked to remove any smeared surfaces.

Limiting construction to dry conditions, using construction methods that restrict traffic in the absorption field and scarifying the absorption surfaces can minimize compaction problems. Construction should not be attempted when soil moisture is above the plastic limit. A good test for this is to work the soil into a ball and roll the ball between the hands. **If it rolls out into a soil wire 1/4 inch or smaller, it's too wet.**

Aggregate- for perforated conduit/gravel filled trenches

Washed gravel or crushed stone is commonly use as the porous media for the trench. The suggested media gradation is 3/4 to 2 inches in diameter. Soft aggregate is not permitted. Fines should be limited to 5% by volume so unwashed material is generally unacceptable. Excessive fines will plug the infiltration surface.

Soil Barrier Material- for perforated conduit/gravel filled trenches

Gravel in trenches should be covered with a material that prevents soil from entering the aggregate when backfiring. The barrier must allow air and moisture to pass through the barrier. Synthetic filter fabric is the material of choice. Untreated building paper and/or a two-inch layer of straw are second choices. Polyethylene and treated building paper are relatively impervious to air and moisture and shall not be used.

WASTEWATER SYSTEM MAINTENANCE

The initial design and installation of a private wastewater system is the first step in the provision of a sanitary trouble free method of wastewater management. To assure you maximize your investment that system must be subjected to a routine maintenance program.

It is suggested that when you reset your clocks to daylight saving time in the spring, you check the batteries in your smoke detectors, and check your wastewater system. This activity can save your wastewater system and the many dollars required for a system replacement.

Private wastewater treatment systems begin their functions with the septic tank. This unit allows the separation of solids contained in the waste stream. Some solids are deposited on the tank floor where they undergo decomposition. There are lighter wastes that float to the surface and form a scum layer. The sludge layer on the bottom and the scum layer on the top of the fluid are the two things that cause most system failures. If allowed to accumulate beyond a management level they are carried out of the tank. When carried out of the tank they plug the absorption system resulting in a permanent system failure. When the tank nears its maximum management capacity it has to have the accumulated wastes removed.

How do I check my system?

The exact method will depend upon the way your septic tank was installed, was an inspection port left at the top of the tank, or do you have to excavate to an opening? Regardless of the method required you must access the septic tank so you can measure the solids in the tank. Assuming you have opened the tank, you now:

1. Wrap white terry cloth around a stick. The stick must be long enough to reach the tank bottom, and contain as much cloth as is required to measure the total fluid depth.
2. Insert the stick slowly into the tank until you reach the tank bottom.
3. Allow the stick to remain motionless for several minutes.
4. Withdraw the stick slowly. When withdrawn you should be able to - (a) determine the total fluid depth, (b) determine the depth of the sludge accumulation, shown by the sludge particles clinging to the cloth.

When checking your tank the scum level should also be measured. To measure the scum layer you will need a device with a hinged flap or a horizontal foot (an ordinary garden hoe can be used).

1. Insert your measuring device into the tank as before.
2. Lower the device slowly into the tank until it touches the scum layer.
3. Mark your device for the upper surface.
4. Push the device through the scum layer slowly.
5. When the scum layer is penetrated, raise the device until you can feel the hinged flap or the horizontal foot make contact with the bottom surface of the scum layer.
6. After measuring the scum layer locate the tank outlet with your device, and determine if the scum layer is at an elevation that will allow scum to escape into the absorption field.

Actual inspection of sludge and scum accumulation is the only way to determine when a given tank needs to be pumped. When a tank is inspected, the depth of the sludge and scum should be measured in the vicinity of the outlet baffle. The tank should be cleaned if either - (a) the bottom of the scum is within 3 inches of the bottom of the outlet device; or (b) sludge comes within the limits specified below.

SEPTIC TANK SCUM AND SLUDGE CLEAR SPACES

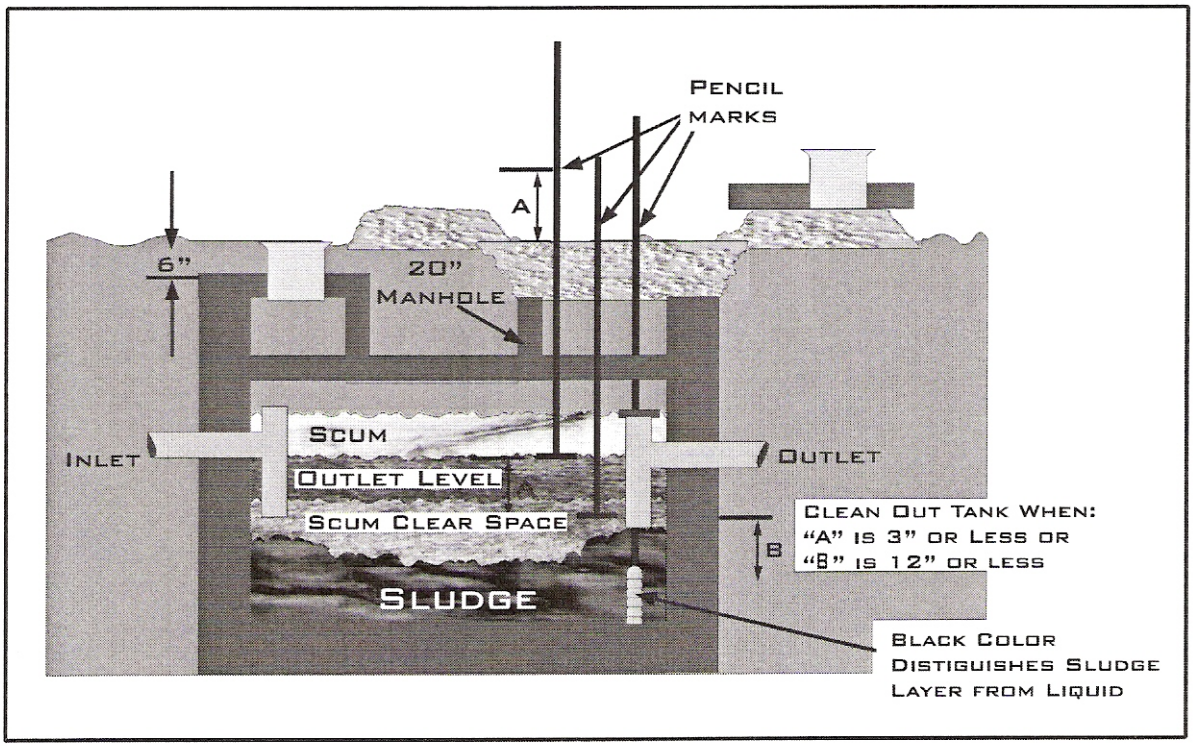

Dates Contractors have attended current wastewater training practices

Updated 3/2016

Company	Contact	Phone #	Address	Yr Attended	Installed in 2015
Auman Company	Jacob Proffitt	628-2833	Hays	2016	1
City Plumbing	Jim Honas	623-8504	Ellis	2016	1
Flax Ditching	Donald Flax	743-8316	WaKeeney	2016	0
Jacobs Plumbing	Tim Jacobs	623-1268	Hays	2016	4
M & D Excavating	Doug Dreher	628-3169	Hays	2016	1
Nate's Plumbing	Nathan Wasinger	628-0882	Hays	2016	0
Shubert HVAC	Ryan Shubert	623-4665	Hays	2016	1
Weigel PHA/C	Troy Weigel	624-6193	Hays	2016	1
Advanced Plumbing	Jeff Gattenby	650-4723	LaCrosse	2015	1
Albers Plumbing	Chris Albers		Hays	2015	0
All Seasons Plumbing	Thomas Coker Jr	259-4039	Hays	2015	0
Hillside Plumbing	Trent McLaughlin	259-3311	Hays	2015	0
Linenberger Plumbing	Gerald Linenberger	259-5608	Hays	2015	0
Niernberger Plumbing	Greg Niernberger	628-2538	Hays	2015	1
Total Lease	Todd Mackey/Jason Steinert		Hays	2015	1
Wasinger Bros.	Tom Wasinger	625-5982	Hays	2015	1
Werth Plumbing	Stan Werth	628-8088	Hays	2015	1
C K Earthworks	Clem Karlin	623-1188	Hays	2014	4
Glassman Corp	Warren Nietling	625-2115	Hays	2014	0
Mickelson PHA/C	Greg Mickelson			2014	0
Leon's Plbg.& Heating	Leon Schumacher	625-7035	Hays	2013	1
Wiesner PHA/C	Danny Wiesner	628-1308	Hays	2013	0
Chambers Sewer & Drain	Don Chambers	625-5505	Hays	2012	0
Flatlander Dirtworks	Joel Younger	625-6015	Hays	2011	5
McIntyre Plumbing	McIntyre Plumbing		Hays	never	1
Excavators					
Flax Ditching	Donald Flax	743-8316	WaKeeney	2016	0
M & D	Darrell Dreher	628-3169	Hays	2016	1
C K Earthworks	Clem Karlin	623-1188	Hays	2014	4
Flatlander Dirtworks	Joel Younger	625-6015	Hays	2011	5
contractor installation violations upon request					